SMART WIRELESS TRIPLE HEAD LED FLOODLIGHT CAMERA

ES00941G
INSTALLATION INSTRUCTIONS

the bright way to do home security.

TEST RITE PDS 540 File Information
Client: Amazon | Client ID: 10163406
Packaging Description: IM
Contact: Art.wordpress@gaudiog.net 65237
Email: art.wordpress@gaudiogroup.com
Colors: IM K
Cutter: Diecut
Division: T1019E1201 File NO.: 20210217 20210145
Item NO.: ES00937G
Package Size: 10x15cm
Finish Date:
Signed by Applicant & Sales Division 20210145 for all Items
Packaging Design Implement Confirmation
Sales Division | Design Division: Joe
Applicant: Amy | Designer: Reading/Fanny
請注意，PDF檔僅供參考，請勿用於印刷，印刷請用Ai檔。
Attention: PDF file is ONLY for reference, DO NOT use for printing. Please use Ai file for printing.
PLEASE DO NOT PRINT THIS (YELLOW) AREA

What's in the box

Light fixture

Mounting bar

Rubber plug

Mounting bracket screw

2groups
x 2

Mounting screw

x 3

Wire nut

Parameter

1. Illumination output: approx. 3500 lumens / 5000K
2. Wattage: 40W
3. Power source: AC120V/60Hz
4. Detect range: up to 32feet, 270 degree
5. Camera view angle: 150 degree

Safety instructions

1. Please read all **warning** and instruction before attempting to install this light.

2. Disconnect power before installing or servicing.

Warning

Risk of Electrical Shock

1. Turn off electrical power at fuse or circuit breaker box before wiring fixture to the power supply.

2. Make sure all electrical and grounded connections are in accordance with the National Electrical Code and applicable local code requirements.

3. All wiring connections should be compliant with UL standard.

Risk of Injury

1. Wear gloves and safety glasses at all times when moving luminaire from carton, installing, servicing or performing maintenance.
2. Avoid direct eye exposure to the light source while it is on. or this may cause irreparable damage to the eyes.

3. Account for small parts and destroy packing material, as these may be hazardous to children.

Risk of Burn

1. Allow fixture to cool before touch.

2. Do not exceed maximum wattage marked on luminaire label.

Attention: lights must be installed by the experienced household wire installer or a qualified electrician. Electrical system and the electrical connection method of light fixture must conform to the national electrical standards and specification requirements of the local architecture.

Installation

1. Install the mounting bar to the outlet box with the stamped word "FRONT" facing away from the outlet box, use two mounting screws that best fit the outlet box.

   (Choose one group of suitable mounting screws among two groups in the hardware pack)
   Note: For the best performance, install fixture at 5.9 feet ~11.5 feet (1.8~3.5m) above the ground.

   Note: Please install the flood light camera **within Wi-Fi covered area** to ensure best performance

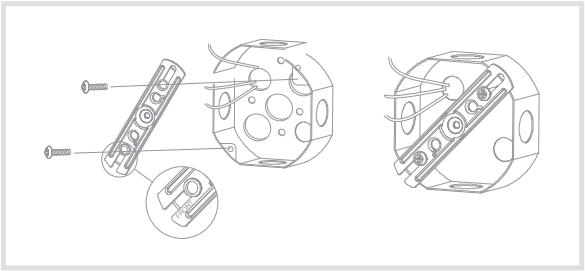

2. Unscrew the center mounting screw on the light fixture in order to remove the back plate on the back of the light fixture

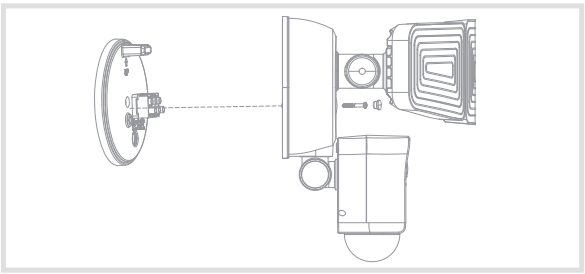

3 Connect the source wires from the outlet box with the wires of the back plate using wire nuts as follows:
Connect the white wire to white wire
Connect the black wire to black wire
Connect the Green wire to the house ground wire
Note:
DO NOT connect electricity before installation and maintenance

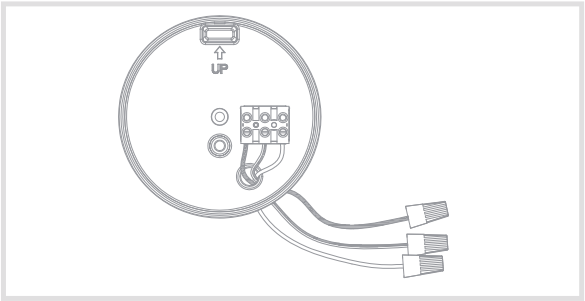

4 Place the back plate against the outlet box, insert the mounting bracket screw through the back plate hole, thread mounting bracket screw into the center hole of the mounting bar. Tighten the mounting bracket screw securely.
Note: The "UP" arrow must point upward.

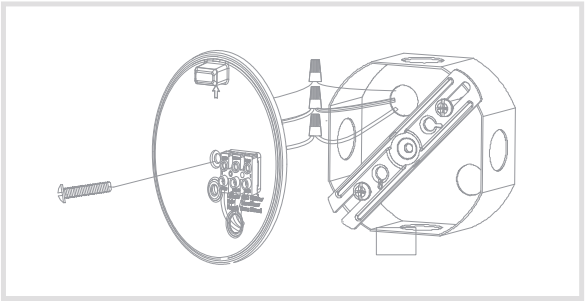

5 Attached the light fixture to the back plate using the center mounting screw:

- Tighten the center mounting screw securely through the center of the light fixture. Do not overtighten.
- Push the rubber plug firmly into the center hole to cover the center mounting screw.

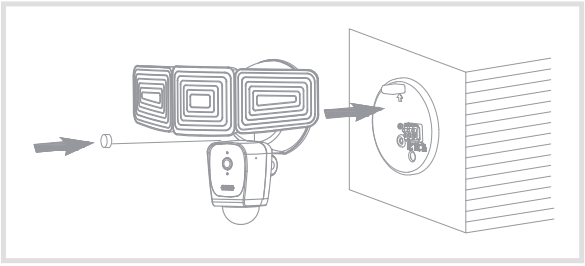

6 Using silicone caulking compound, caulk completely around where the light fixture meets the wall surface to prevent water from seeping into the outlet box.

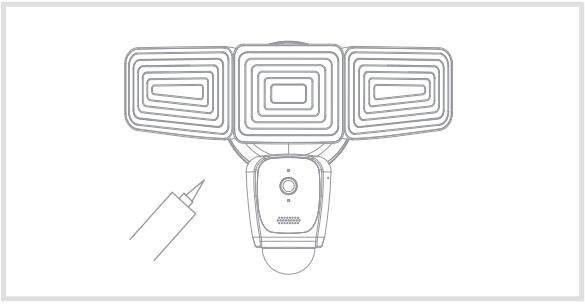

Note: If you install this light fixture on the covered wall or eave without junction box, you must
consult a qualified, licensed electrician and use the appropriate screws (not included) to install this light fixture on the wall or eave directly depending on the surface.

How it Works

Adjusting the Lamp Heads and Camera

1. Swing the lamp heads to adjust the lamp head left and right or up and down to get the desired lamp direction.
2. Gently grasp the motion sensor and adjust the sensor left and right or up and down to get the desired sensor direction.

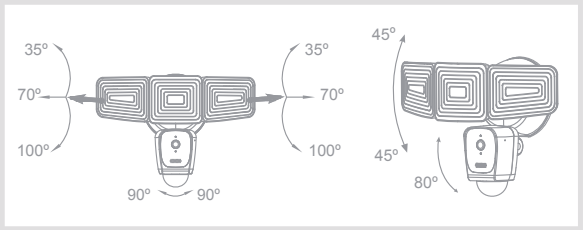

Connection APP

Get the APP and create an account.

Download the 'Home Zone Smart' APP to your smartphone from App Store or Google Play.

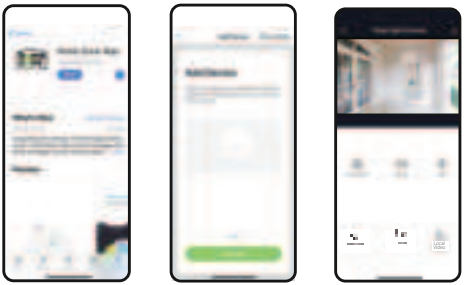

Launch the app from your smart phone and **Create** an account.
Follow the on-screen instructions.

Set up Router

Please install the Floodlight Camera within WiFi covered area to ensure best performance.

Note: Make sure smart phone is connected with your wireless router.
Please note the camera only supports 2.4G Wi-Fi, not 5G Wi-Fi.

Set up your floodlight camera.

- Make sure the indicator is blue and flashing quickly.
- If the indicator light is not blue and flashing, press and hold the Reset button located on the back of the camera head until a prompt sound is heard. The camera will initiate reset process and the indicator light will blink blue when ready for paring.
- Open the App and click on the top right "+" icon to sync new products
- Follow App's instructions to complete network pairing process.
- If the indicator light is solid blue, the camera is connected and ready for viewing.

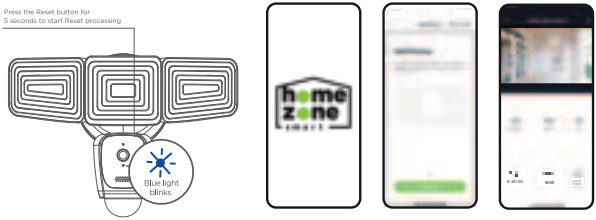

You're done!

Congratulations! Your camera is set up and ready to go.

Basic Device Controls

Save screenshots of live view to mobile device

View saved recordings on local storage
(128G Micro SD card included)

Save recordings of live view to mobile device

Customize motion detection settings

Enable microphone for one-way or two-way talk

Control light and set lighting schedules

Dial 911 for emergencies

Alarm to deter intruders

works with
Hey Google

WORKS WITH
alexa

Note: **Please visit website at www.homezonesecurity.com/home-zone-smart for cloud storage information.**

Appendix: Camera LED Guide

NO.	LED Status	Camera Status
1	Red LED on	System starting up
2	Blue LED blinks	Standby for configuration
3	Red LED blinks	Network pairing
4	Blue LED on	Camera online

Cleaning and Maintenance

1. Clean periodically with soft cloth.

2. Do not use any cleaners with chemicals, solvents or harsh abrasives on this light. Do not use scouring pads, powders, steel wool or brasive paper. They could cause deterioration of the finish.

FCC

This device complies with Part 15 of the FCC Rules.
Operation is subject to the following two conditions:
(1) this device may not cause harmful interference, and
(2) this device must accept any interference received, including interference that may cause undesired operation.

This device complies with FCC Part 15 of FCC Rules.
Warning: Changes or modifications to this unit not expressly approved by the party responsible for compliance could void the user's authority to operate the equipment.

NOTE: This equipment has been tested and found to comply with the limits for a Class B digital device, pursuant to Part 15 of the FCC Rules. These limits are designed to provide reasonable protection against harmful interference in a residential installation. This equipment generates, uses and can radiate radio frequency energy and, if not installed and used in accordance with the instructions, may cause harmful interference to radio communications.
However, there is no guarantee that interference will not occur in a particular installation. If this equipment does cause harmful interference to radio or television reception, which can be determined by turning the equipment off and on, the user is encouraged to try to correct the interference by one or more of the following measures:

- Reorient or relocate the receiving antenna.
- Increase the separation between the equipment and receiver.
- Connect the equipment into an outlet on a circuit different from that to which the receiver is connected.
- Consult the dealer or an experienced radio/TV technician for help.

Register & Subscribe today to protect your investment and join our email list!

home zone™ security

Scan below for link:

homezonesecurity.com
support@homezone-usa.com
US: +1 888-782-5618

Why Register?

- Receive your extended warranty
- Get professional warranty support
- Be the first to hear the latest product news.
- Get exclusive deals delivered to you email.

Get exclusive offers and deals when you subscribe!

Thank you for choosing Home Zone Security!
We are here to support you every step of the way.

Please be sure to contact our customer support for troubleshooting and register your product for additional benefits. Products must be sold by an authorized reseller or distributor to be valid.